HF SSB RECEIVER R2122

SAILOR COMPACT 2000 PROGRAMME

ENGLISH

SAILOR

The SAILOR R2122 is the general purpose receiver for SAILOR Compact HF SSB Programme 2000.

The SAILOR R2122 can be installed either as an independent unit or in combination with the other elements in the Compact 2000 Programme.

The SAILOR Compact HF SSB Programme 2000 is a powerful, advanced highly technological, short wave communication system, which is extremely easy to operate.

The SAILOR Compact HF SSB Programme 2000 has been constructed to withstand the most extreme conditions experienced in the maritime environments. The compact, weatherproof construction ensures a high degree of resistance to sea spray. The modular construction has made it possible to create a compact, reliable, and easy to service HF SSB radio equipment.

In the design of this HF SSB communication system, S. P. Radio A/S have taken into account all the circumstances it will be exposed to in day-to-day operation. However, even a product of this high quality requires regular servicing and maintenance.

S. P. Radio A/S is one of Europe's leading producers of maritime radio communication equipment – a position which has been maintained by means of constant and extensive product development. We have a world-wide network of dealers with general agencies in seventy countries. All our dealers are well-trained and able to service all SAILOR products.

S. P. RADIO A/S

DK-9200 AALBORG SV · DENMARK

CONTENTS

	page
INTRODUCTION	1
CONTROLS	2
READ-OUT	3
OPERATION	4
Initial Settings	4
Select a Frequency	4
Select Mode	4
Turn off/on the AGC	5
Turn off/on the Squelch	5
Dim the Display	5
Tune the Receive Frequency	5
Clarify the Received Signal	5
CHANNEL MODE OPERATION	6
Operation in CH Mode	6
Select an ITU Channel	6
Select a Quick Select Channel Number	6
Store a New Frequency in Quick Select Channel 0-99	6
Change the Contents of a Quick Select Channel	6
Delete the Contents of a Quick Select Channel	7
Check which Quick Select Channel Numbers already Used	
Convert a Channel Number to the Corresponding Frequency	7
Convert a Frequency to a Corresponding Quick Select Channel Number	7
SCANNING/SWEEP OPERATION	7
SCAN PROGRAMMES	7
Build-up a Scan Programme	7
Start a Scan Programme	7
Stop a Scan Programme	7
Check the Contents of a Scan Programme	8
Delete a Channel from a Scan Programme	8
Select a Scan Programme	8
SWEEP PROGRAMMES	8
Select Sweep Programmes	8
Stop Sweeping	8
Start Sweeping again	8
Show Start Frequency	8
Show Stop Frequency	9
Change Start Frequency	9
Change Stop Frequency	9
Difference between squelch off or on	9
Select Squelch off	9
Select Squelch on	9
Stop Sweeping and Fine-tune the Receiver	9
GROUNDED AERIAL	10
Ground the Aerial	10
Return from Grounded Aerial	10
ERROR MESSAGES	9
Error Messages from the Receiver in short form	10
INSTALLATION	10
Aerials and RF Grounding	10
Mounted with H1209	10
Electric Connection and Assembling	11
Mechanical Dimensions and Location of Mounting Holes	11
QUICK SELECT/FREQUENCY TABLE	12
QUICK SELECT CHART	13

GENERAL INFORMATION

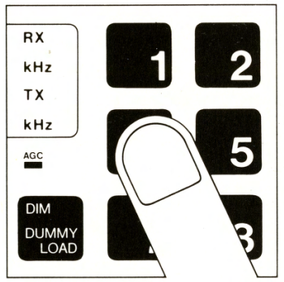

OPERATING

The operating panel is provided with a really high quality push-button keyboard offering an attractive solid feel. Furthermore keyed operations are instantly confirmed by means of the display read-out.

To ensure safe operation under all conditions the keyboard is fitted with night-time illumination.

CONTROLS

VOL OFF	Volume control and on/off switch for the mains.
RF	Manual RF gain control.
FREQ ▽	Tunes the receive frequency down.
FREQ △	Tunes the receive frequency up.
CLARIF △	Tunes the receive frequency up in 10 Hz steps.
CLARIF ▽	Tunes the receive frequency down in 10 Hz steps.
RX	Selects receive functions or converts a channel number to the corresponding frequency.
CH	Selects channel functions.
2182	Selects the distress frequency 2182 kHz.

DIM	Reduces/increases the display light and switches on/off the display and keyboard panel illumination.
SQ	Switches the squelch function on/off.
MODE	Selects modulation type LSB, USB and AM.
SC	Selects the scan or sweep programme.
7	Digits from 1 to 0.
ENT	Terminates the keying-in sequence or stops the scanning.
.	Sets the decimal point for the frequency in kHz.
CH (Digits 0-99) ADD	Adds the RX frequency to the channel number.
CH (Digits 0-99) DEL	Deletes the RX frequency from the channel.

READ-OUT

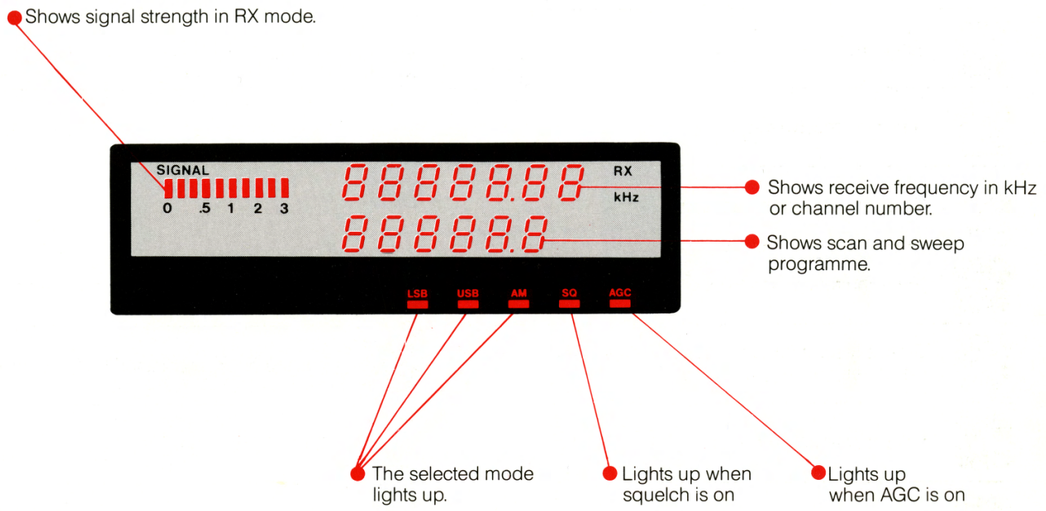

OPERATION

Initial Settings

Turn Vol on/off control knob to approx. mid position and set RF gain knob fully clockwise.

Select a Frequency

1. Receive frequency e.g. 1701.2 kHz.

Press:

Read-out:

Select Mode

For frequencies below 1605 kHz, AM mode is automatically selected. For frequencies above 1605 kHz, J3E upper sideband (USB) is automatically selected.

USB = SSB with upper sideband
AM = H3E with upper sideband
LSB = SSB with lower sideband

If you want to change the mode, then press:

Read-out:

Press:

Read-out:

Press:

Read-out:

Turn off/on the AGC

Press:

Read-out:

Press:

Read-out:

Turn off/on the Squelch

Press:

Read-out:

Press:

Read-out:

Dim the Display

Step 1: Reduces the light in the display and keyboard light on.

Step 2: Switches off the display light and keyboard light.

Step 3: Full light in the display and keyboard light off.

Step 0: Normal light in the display and keyboard light off.

Tune the Receive Frequency

Press:

in USB, LSB mode with 100 Hz steps
in AM mode with 1 kHz steps

Clarify the Received Signal

Press:

increases the frequency in 10 Hz steps

or

decreases for frequency in 10 Hz steps, for clearest reception (max. ± 150 Hz).

Note! The clarifier is disabled when a new frequency is keyed-in.

CHANNEL MODE OPERATION

Operation in CH Mode

All ITU channel numbers have been pre-programmed in the receiver. Furthermore it is possible to programme 100 user defined quick select channels.

Select an ITU Channel

e.g. channel 402.

Press:

CH 4 0 2 ENT

Read-out:

Select a Quick Select Channel Number

e.g. channel 43.

Press:

CH 4 3 ENT

(observe, the set will go to the last selected channel frequency, if the selected channel is empty).

Read-out:

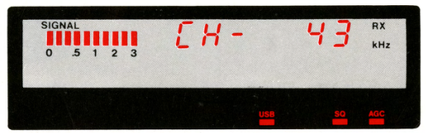

Store a New Frequency in Quick Select Channel 0-99

e.g. in channel 20.

Key-in the wanted RX frequency and mode, e.g. RX = 1701.2 kHz.

Then press:

CH 2 0 ADD

Read-out:

Press:

RX

Read-out:

Change the Contents of a Quick Select Channel

e.g. channel 20.

Key-in the wanted RX frequency and mode, e.g. RX = 2300.0.

Then press:

CH 2 0 ADD

Read-out:

Press:

RX

Read-out:

Delete the Contents of a Quick Select Channel

e.g. channel 20.

Press:

CH 2 0 DEL

(Observe, the set will go to the next programmed channel).

Check which Quick Select Channel Numbers already Used

Press:

CH – CH you will step through the channel register starting from the selected channel number.

Convert a Channel Number to the Corresponding Frequency

Press:

RX

Convert a Frequency to a Corresponding Quick Select Channel Number

Press:

CH

Note: If the frequency keyed-in is an ITU frequency it is not possible to go from frequency to channel number.

SCANNING/ SWEEP OPERATION

SCAN PROGRAMMES

There are 10 scan programmes (0-9) and each of them is able to contain 128 channel numbers (ITU and quick select channel numbers can be used).

Build up a Scan Programme

e.g. programme 2, consisting of e.g. channel 4, channel 402, channel 1604.

Press:

SC 2 ENT STOP 4 ADD 4 0 2 ADD 1 6 0 4 ADD

Start a Scan Programme

Press:

ENT

Stop a Scan Programme

Press:

STOP

SWEEP OPERATION

Check the Contents of a Scan Programme

e.g. programme 2.

Press:

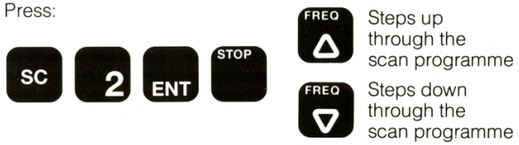

Delete a Channel from a Scan Programme

e.g. channel 402 in programme 2.

Press:

when channel 402 is displayed then press:

Press: 

to continue scanning

Read-out:

Select a Scan Programme

e.g. programme 1.

Press:

SWEEP PARAMETERS

The R2122 has 10 programmable sweep programmes (SC numbers 10 to 19). Each programme has the following parameters, witch can be changed by means of a programming menu.

Trigger Source

0) Squelch trigger with full RF-sensitivity.
1) Squelch trigger with adjustable RF-sensitivity.

Dwell Time

Dwell time in steps of 100 ms from 0,3 sec. to 9,9 secs.

Hold Time

(Listen period when a trigger source is active). Intervals from 1 sec. to 60 secs. increasing 1 sec. each interval.

Step Frequency

(Delta frequency between two listen frequencies). Intervals from 100 Hz to 9900 Hz, increasing 100 Hz. each interval.

Start Frequency

From 100 Hz to 29999.9 kHz, increasing 100 Hz each interval.

Stop Frequency

From 100 Hz to 29999.9 kHz, increasing 100 Hz. each interval.

Selected invalid Frequencies

When the sweep programme is running a max. number of 12 frequencies can be deleted from the sweep band.

Programming of the sweep programme

Press:

and then two digits to give the number of the sweep programme.

E.g. press:

to give the sweep programme number 12.

Press:

to start the programming menu. The display will ask for the code (Trigger Source) and show the value of the present code in the first line.

Press:

for no change or key in the new value after

0 – The sweep function uses squelch with full RF-sensitivity.
1 – The sweep function uses squelch with adjustable RF-sensitivity.

The display will now show the present value of dwell time.

Key in a new dwell time (0,3 to 9,9 secs.) after

or press

to keep the present dwell time.

The display will now show the present hold time.

The hold time is the time the sweep programme will use to listen on a frequency if the trigger source is in active mode.

Key in the new hold time (1 to 60 sec.) after

ADD

or press

ADD

to keep the previous hold time.

The display will now show the present step frequency.

The step frequency is the delta frequency between the two frequencies on which the sweep programme will listen.

Key in a new frequency (0,1 to 9,9 kHz) after

ADD

or press

ADD

to keep the previous value of the step frequency.

The display will now show the present start frequency (Begin Frequency).

The start frequency is the frequency, with which the sweep programme will start when a new sweep programme is selected. If the start frequency is higher than stop frequency, then the sweep programme runs backwards.

Key in the new start frequency (100,0 - 29999,9 kHz) after

ADD

or press

ADD

to keep the old value of the start frequency.

The display will now show the present value of the stop frequency (End Frequency).

When the sweep programme passes the stop frequency, the sweep programme will return to the start frequency.

Key in the new stop frequency (100,0 - 29999,9 kHz) after

ADD

or press

ADD

to keep the previous value of the stop frequency.

When the last

ADD

was pressed, the lower line in the display changes from »Pr EF« to »SC-12«. This means that the programming of sweep programme no. 12 is finished and sweep programme no. 12 is now running from the start frequency as displayed in the upper line.

Start/stop of the sweep program

When the lower line in the display show »SC« followed by two digits, then the sweep programmes start or stop running by turns when the

STOP
ENT

button is pressed.

When the sweep programme stops and the upper line is empty, the programme starts to run from the start frequency. If the upper line shows a frequency with the clarifier digit on, then the sweep programme is stopped manually, and it will start running from the frequency on which the sweep programme was stopped.

When the sweep programme is stopped manually, the up/down arrow keys can be used to adjust the receiver frequency.

When a new sweep programme has to be started, or the sweep programme has to be started from the start frequency, then press

SC

followed by the two digits for the sweep programme number.

Delete af frequency from the sweep programme

It is possible to delete a frequency from a running sweep programme. In case the sweep programme stops automatically at the same frequency every time it passed, and the user does not want to listen at that frequency, the user can delete the frequency from the sweep programme.

When the programme stops automatically on a frequency, then press

DEL

and the frequency will be deleted from the sweep programme. Next time the programme passes the frequency it will jump over.

To restore a deleted frequency, press

SC

followed by

STOP
ENT

In case the step frequency is lower than 1 kHz, the sweep programme jumps over a 2 kHz band with the deleted frequency as the centre frequency.

The max. number of deleted frequencies is 12.

GROUNDED AERIAL

Note! The aerial is grounded when the set is switched off

Ground the Aerial

Press:

RX ▽ both at the same time.

Read-out:

Return from Grounded Aerial

Press:

STOP

ERROR MESSAGES

Error Messages from the Receiver in short form

Error codes:

00. Internal power supply low (see the instruction manual).

15. Keying sequence has not been finished by the ENT key.

Example:

If the communication link between HF SSB Receiver/Exciter and HF SSB Transmitter has been interrupted, the read-out shows:

INSTALLATION

Aerials and RF Grounding

For receiver aerial use either a whip aerial 6-9 metres or a wire aerial of at least 6 metres. The whip aerial will normally give the best result owing to its radiation characteristics.

For the leading-down from the aerial to receiver use 50 ohm coaxial cable of good quality.

At the footpoint of the aerial, mount a junction box, e.g. H1209 for the connection of aerial and coaxial cable. The box must be designed for outdoor mounting in maritime environments.

The aerial must be placed as high and clear as possible.

Mounted with H1209

To be grounded effectively.

If metal mast, to mast.

Metal mast must be connected to either metal hull or to grounding system.

If wooden mast, to cu-strip (50 × 1) fastened to the mast.

In the lower end, the strip must be connected to deck (if metal ship) or to separate grounding system (equal to transmitter system) close to mast.

All standing rigging must in the top end be connected to metal mast or cu-strip and in the receiver end to cu-strip or grounding system.

To avoid crackling noise, make all connections by welding, bolting or soldering.

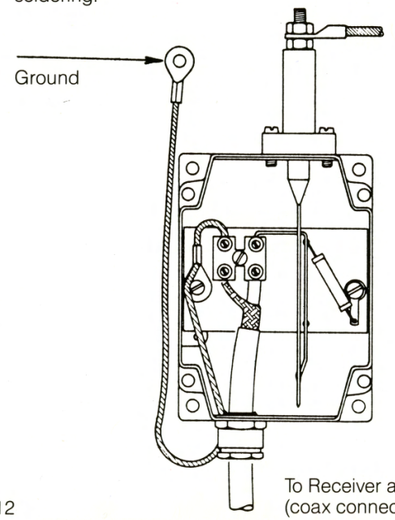

Electric Connection and Assembling

JO3-5

Pin No. 1 Mute RX	Pin No. 13 Supply on/off
Pin No. 2 GND	Pin No. 14 Not used
Pin No. 3 + loudspeaker	Pin No. 15 Not used
Pin No. 4 – loudspeaker, -battery	Pin No. 16 AF pre.amp.
Pin No. 5 GND	Pin No. 17 0 dBm out common
Pin No. 6 SP BUS interrupt	Pin No. 18 0 dBm out
Pin No. 7 NC	Pin No. 19 Ext. RF control
Pin No. 8 NC	Pin No. 20 GND
Pin No. 9 GND	Pin No. 21 NC
Pin No. 10 – 18V out	Pin No. 22 GND
Pin No. 11 + 9V out	Pin No. 23 + 9V out
Pin No. 12 + battery	Pin No. 24 + battery
	Pin No. 25 – battery

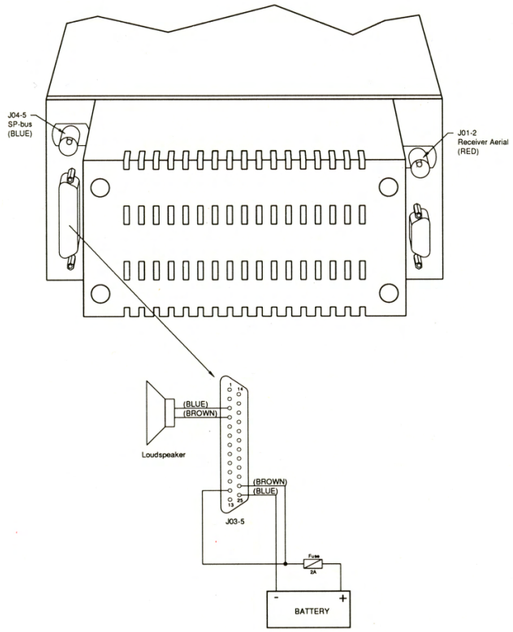

Mechanical Dimensions and Location of Mounting Holes

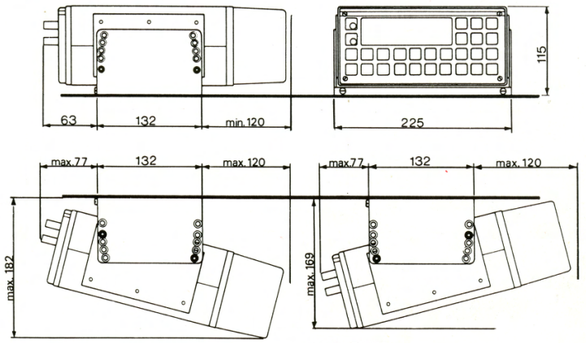

WEIGHT

Mounting kit H2055:	1.5 kg
Loudspeaker H2054:	5.5 kg
Loudspeaker H2074:	4.0 kg
Receiver:	4.5 kg

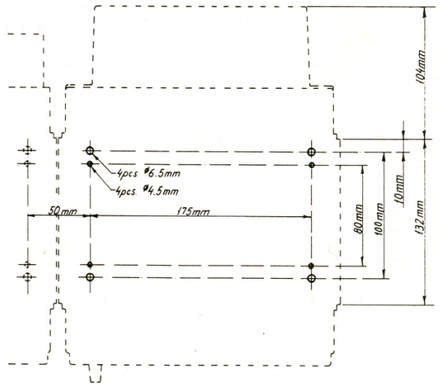

QUICK SELECT/FREQUENCY TABLE

(Max. 255 frequencies of which 100 can be stored as quick select frequencies).

STATION	TRANSMITTER		RECEIVER	
	Frq.	No.	Frq.	No.

STATION	TRANSMITTER		RECEIVER	
	Frq.	No.	Frq.	No.

STATION	TRANSMITTER		RECEIVER	
	Frq.	No.	Frq.	No.

STATION	TRANSMITTER		RECEIVER	
	Frq.	No.	Frq.	No.

STATION	TRANSMITTER		RECEIVER	
	Frq.	No.	Frq.	No.

STATION	TRANSMITTER		RECEIVER	
	Frq.	No.	Frq.	No.

STATION	TRANSMITTER		RECEIVER	
	Frq.	No.	Frq.	No.

STATION	TRANSMITTER		RECEIVER	
	Frq.	No.	Frq.	No.

STATION	TRANSMITTER		RECEIVER	
	Frq.	No.	Frq.	No.

STATION	TRANSMITTER		RECEIVER	
	Frq.	No.	Frq.	No.

NOTES:

NOTES:

QUICK SELECT CHART

Distress Frequency	2182	2182.0
RX Frequency Selection	RX 1 7 0 1 . 2 ENT	1701.2
Quick Select Channels	CH 4 3 ENT	CH- 43
ITU Channel Selection	CH 4 0 2 ENT	CH- 402

S.P. RADIO A/S

PORSVEJ 2 • DK-9200 AALBORG SV • DENMARK
TEL. INT. + 45-98180999 • TELEX 69 789 SPRAD DK • TELEFAX + 45-98186717